Mc'd allover

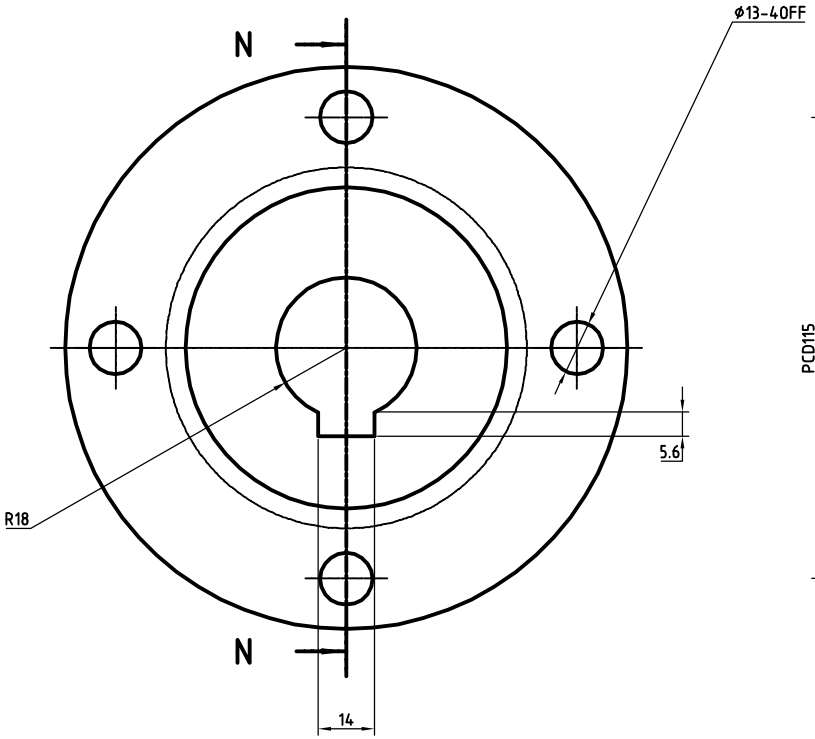

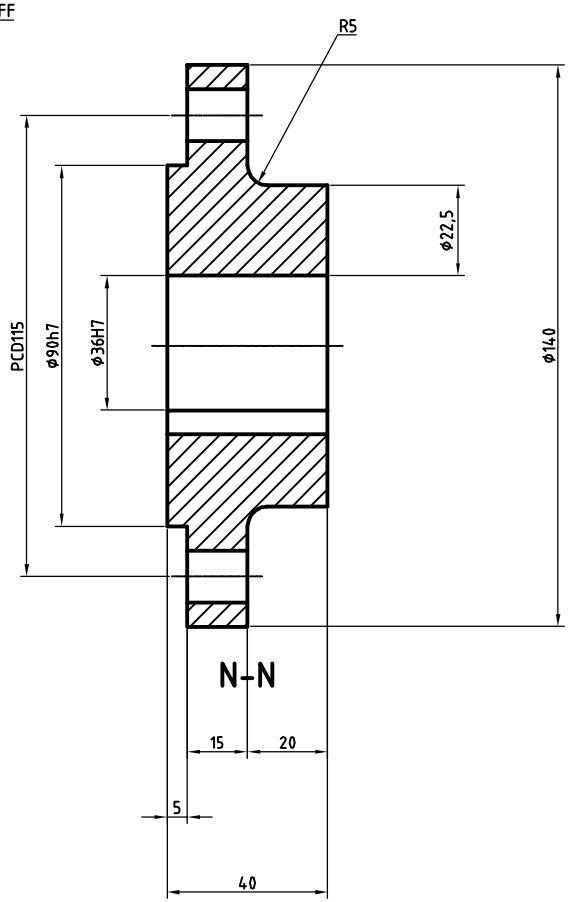

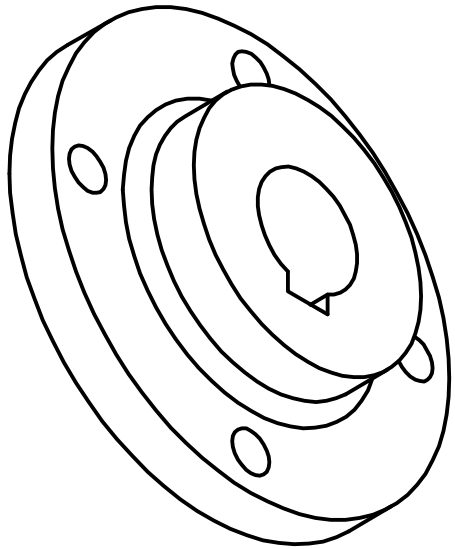

SKAT CONSULTING RWANDA LTD
P.O BOX 1017
KGALI CITY RWANDA

SURFACE ROUGHNESS			
▽	8 to 25 Ra µm	▽▽▽	0.025 to 1.6 Ra µm
▽▽	1.6 to 8 Ra µm	▽▽▽▽	<0.025 Ra µm

PERMISSIBLE DEVIATIONS FOR UNTOLERANCED DIMENSIONS AS PER IS4897-86 AND IS2102-69

	DATE	NAME
DRAWN	00/00/00	ZZZ
CHECKED	00/00/00	WWW
APP'D	00/00/00	XXX

SCALE 1:1 PROJ. ORTHOGRAPHIC

Project Name: Roller Crusher
Item Name: Coupling-2
Mtl.Spec. XXXX
UNIT WT. 0000Kgs.
Product No. 0000
Drg. No./Rev. status. SRC111/00