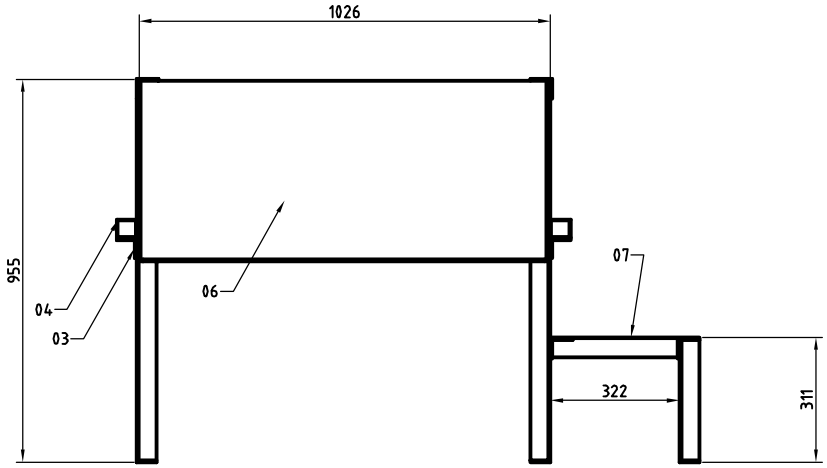

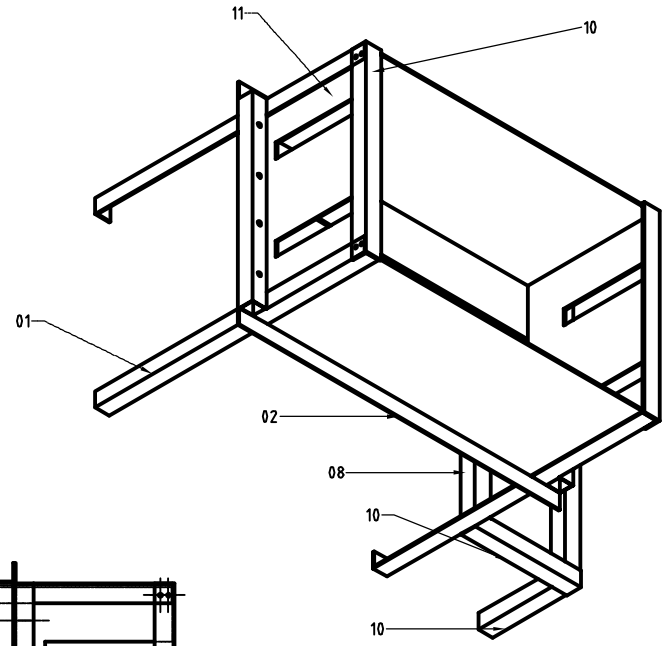

Fabricate Allover

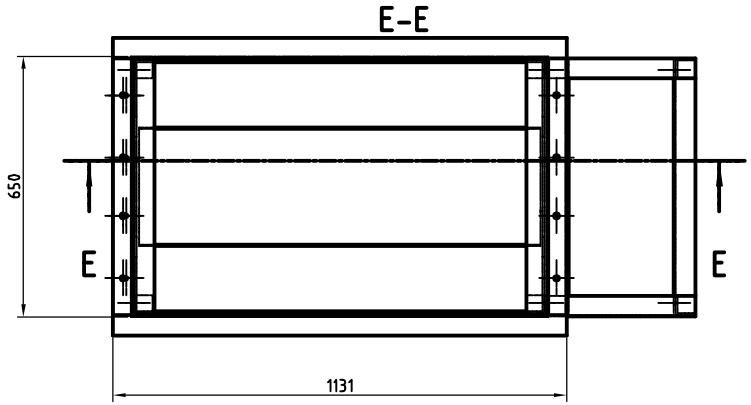

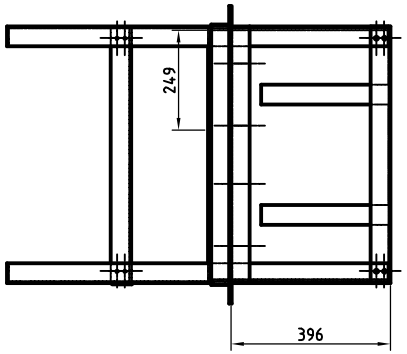

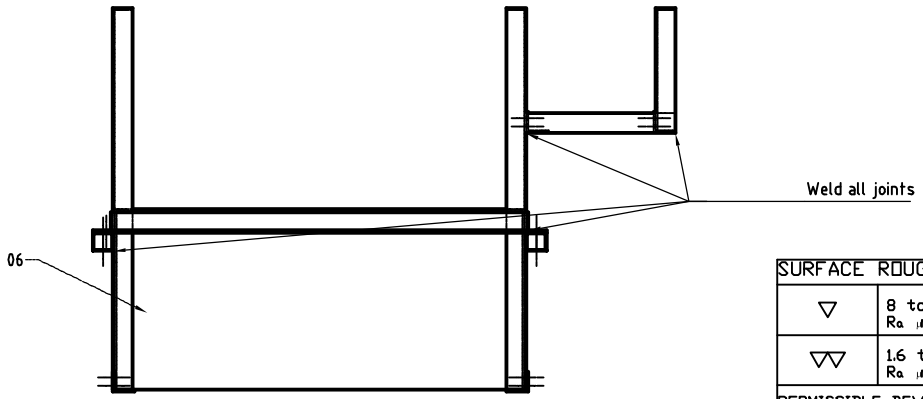

Sl#	Item Name	Code No	Material	Size	Qty+Length Req
11	Member -K		Side Plate	650x396X3	2pcs
10	Member -J		Angle Bar		2pcs of 650mm@Long
09	Member -I		Angle Bar		2pcs of 311mm@Long
08	Member -H		Angle Bar		2pcs of 650 mm@Long
07	Member -G		MS-Sheet		2pcs of 322mm@Long
06	Member -F		Side Plate	1131x396x3	2pcs
05	Member -E		Base plate	294x1026x3	2pcs
04	Member -D		Sq Tube	50x50x2	2pcs of 640mm@Long
03	Member -C		Angle Bar	50x50x2	2pcs of 640mm@Long
02	Member -B		Angle Bar	50x50x2	2pcs of 1131@Long
01	Member -A		Angle Bar	50x50x2	2pcs of 955mm@Long

Bill Of Materials

SKAT CONSULTING RWANDA LTD
P.O BOX 1017
KGALI CITY RWANDA

SURFACE ROUGHNESS

▽	8 to 25 Ra µm	▽▽▽	0.025 to 1.6 Ra µm
▽▽	1.6 to 8 Ra µm	▽▽▽▽	<0.025 Ra µm

PERMISSIBLE DEVIATIONS FOR UNTOLERANCED DIMENSIONS AS PER IS4897-86 AND IS2102-69

	DATE	NAME
DRAWN	00/00/00	FG
CHECKED	00/00/00	Samuel
APP'D	00/00/00	XXX

SCALE 1:1 PROJ. ORTHOGRAPHIC

Project Name: Roller Crusher
Item Name: Frame Structure
Mtl.Spec. XXXX
UNIT WT. LISTED
Product No.
Drg. No./Rev. status. SRC101/00