Cast and Machine

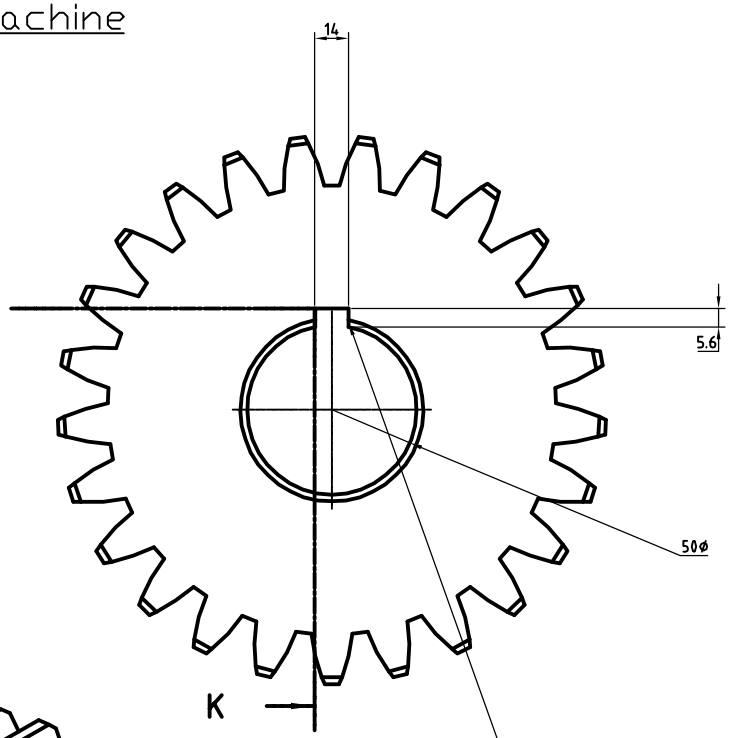

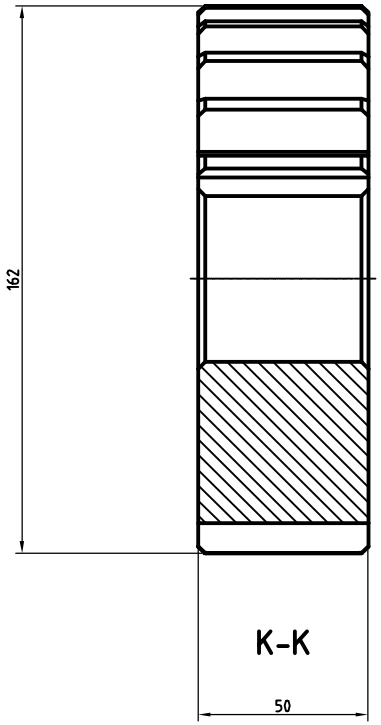

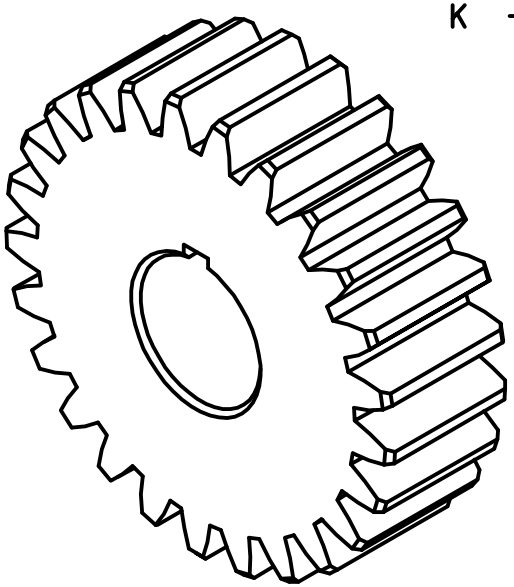

KEY-9X14X50
M-Steel

Gear Data
Z-25
Module -6

SKAT CONSULTING RWANDA LTD
P.O BOX 1017
KGALI CITY RWANDA

SURFACE ROUGHNESS			
▽	8 to 25 Ra µm	▽▽▽	0.025 to 1.6 Ra µm
▽▽	1.6 to 8 Ra µm	▽▽▽▽	<0.025 Ra µm

PERMISSIBLE DEVIATIONS FOR UNTOLERANCED DIMENSIONS AS PER IS4897-86 AND IS2102-69

	DATE	NAME
DRAWN	00/00/00	FGG
CHECKED	00/00/00	SAMUEL
APP'D	00/00/00	XXX

SCALE 1:1 PROJ. ORTHOGRAPHIC

Project Name: Roller Crusher
Item Name: Spur Gear -3
Mtl.Spec.: CI
UNIT WT. Kgs.
Product No.
Drg. No./Rev. status.: SRC106/00