Fabricate and Machine

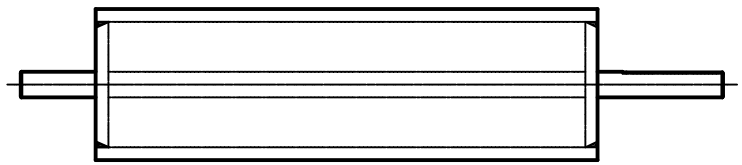

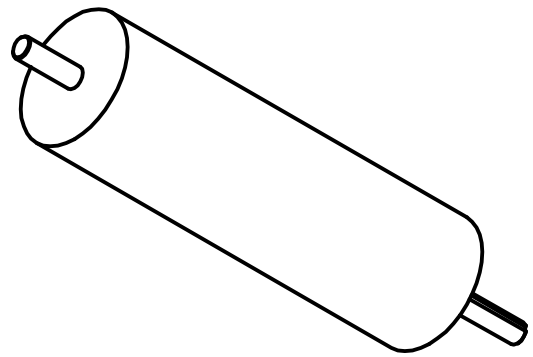

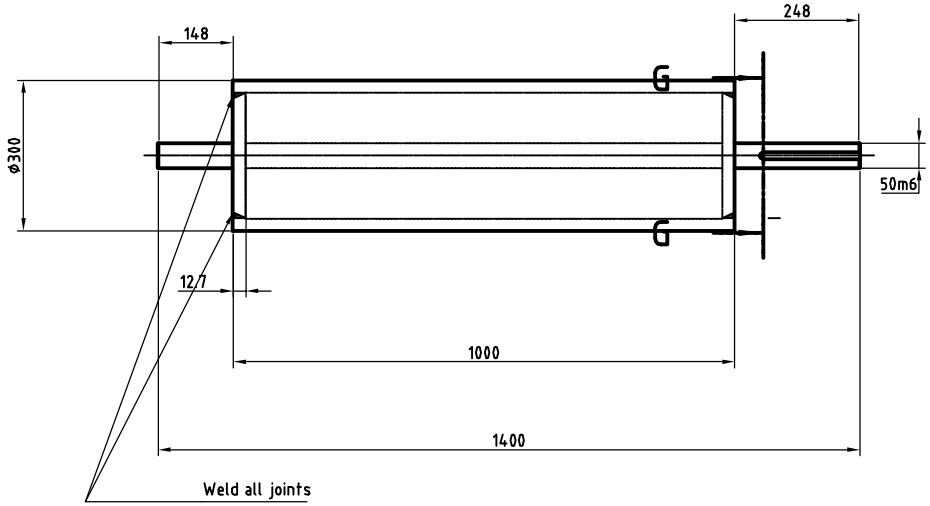

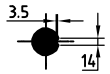

G-G

Bill Of Materials
Shaft-50Ø-1400long
943x1000x12.7mmtk
MS -Plate-300Øx12.7

SKAT CONSULTING RWANDA LTD
P.O BOX 1017
KGALI CITY RWANDA

SURFACE ROUGHNESS			
▽	8 to 25 Ra µm	▽▽▽	0.025 to 1.6 Ra µm
▽▽	1.6 to 8 Ra µm	▽▽▽▽	<0.025 Ra µm

PERMISSIBLE DEVIATIONS FOR UNTOLERANCED DIMENSIONS AS PER IS4897-86 AND IS2102-69

	DATE	NAME
DRAWN	00/00/00	FG
CHECKED	00/00/00	Samuel
APP'D	00/00/00	XXX

SCALE 1:1 PROJ. ORTHOGRAPHIC

Project Name: Roller Crusher
Item Name: Roller Drum -A
Mtl.Spec. MS
UNIT WT. Kgs.
Product No.
Drg. No./Rev. status. SRC100/00