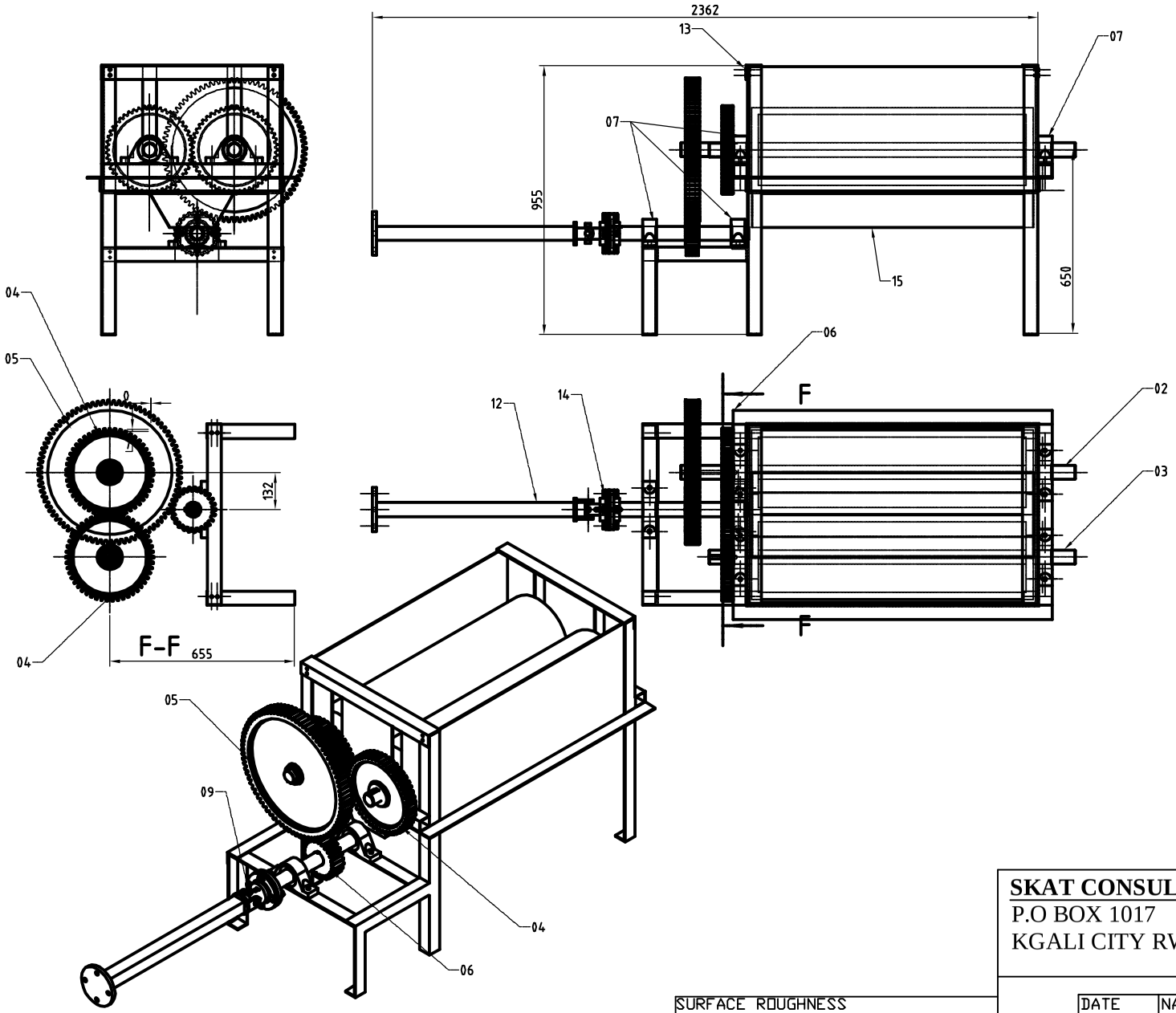

Sl#	Item Name	Code No	Material	Size	Length Req
16	Coupling Bolts		HTS	Ref Drg	4Pcs
15	Outlet Funnel		Ms	Ref Drg	1Pcs
14	Pillow Block Bolts		HTS	M12x50Long	12Pcs
13	Frame Bolts		Ms	M10x30Long	16Pcs
12	Drive Shaft		Ms	Ref Drg	1Pcs
11	Coupling-2		MS	Ref Drg	1Pcs
10	Coupling-1		MS	Ref Drg	1Pcs
09	Union /Journal		Purchase	Ref Drg	1Pcs
08	Short Shaft		MS	Ref Drg	1Pcs
07	Pillow Brg Blocks	P211		Ref Drg	6Pcs
06	Spur Gear -3		CI	Ref Drg	1Pcs
05	Spur gear -2		CI	Ref Drg	1Pcs
04	Gear type 1		CI	Ref Drg	2Pcs
03	Roller Drum -B		MS	Ref Drg	1Pcs
02	Roller Drum-A		MS	Ref Drg	1Pcs
01	Frame structure		MS	Ref Drg	1Pcs

Bill Of Materials

SKAT CONSULTING RWANDA LTD
P.O BOX 1017
KGALI CITY RWANDA

SURFACE ROUGHNESS

▽	8 to 25 Ra µm	▽▽▽	0.025 to 1.6 Ra µm
▽▽	1.6 to 8 Ra µm	▽▽▽▽	<0.025 Ra µm

PERMISSIBLE DEVIATIONS FOR UNTOLERANCED DIMENSIONS AS PER IS4897-86 AND IS2102-69

	DATE	NAME
DRAWN	00/00/00	FGG
CHECKED	00/00/00	SAMUEL
APP'D	00/00/00	XXX

SCALE 1:1 PROJ. ORTHOGRAPHIC

Project Name: Roller Crusher
Item Name: Assembly
Mtl.Spec. listed
UNIT WT. listed
Product No.
Drg. No./Rev. status. SRC100/00